Back To Article

WHEEL ALIGNMENT SPECIFICATIONS

TECHNICAL SERVICE BULLETIN

Reference Number(s): TJ 19674,Â Date of Issue:Â July 19, 2010

VOLVO:	1999-2011 S80; 2001-2010 V70; 2001-2011 S60; 2003-2011 XC70, XC90; 2004-2011 S40; 2005-2011 V50; 2006-2011 C70; 2007-2011 S80; 2008-2011 C30; 2010-2011 XC60
GROUP:	6010
DESCRIPTION:	Wheel Alignment
REFERENCE:	VIDA
RELATED REF. NUMBER(S) :	US19674.3.3 en-GB

Superceded Bulletin(s): TJ 19674,Â Date of Issue:Â 02-09-2010

VEHICLE TYPE

VEHICLE TYPE

Type	Eng	Eng Desc	Sales	Body	Gear	Steer	Model Year	Plant	Chassis range	Struc Week Range
124	Â	Â	Â	Â	Â	Â	2007-9999	Â	-	0-0
134	Â	Â	Â	Â	Â	Â	2011-9999	Â	-	0-0
135	Â	Â	Â	Â	Â	Â	2008-9999	Â	-	0-0
136	Â	Â	Â	Â	Â	Â	2008-9999	Â	-	0-0
156	Â	Â	Â	Â	Â	Â	2010-9999	Â	-	0-0
184	Â	Â	Â	Â	Â	Â	1999-2006	Â	-	0-0
275	Â	Â	Â	Â	Â	Â	2003-9999	Â	-	0-0
285	Â	Â	Â	Â	Â	Â	2001-2007	Â	-	0-0
295	Â	Â	Â	Â	Â	Â	2001-2007	Â	-	0-0
384	Â	Â	Â	Â	Â	Â	2001-2009	Â	-	0-0
533	Â	Â	Â	Â	Â	Â	2007-9999	Â	-	0-0
542	Â	Â	Â	Â	Â	Â	2006-9999	Â	-	0-0
544	Â	Â	Â	Â	Â	Â	2004-9999	Â	-	0-0
545	Â	Â	Â	Â	Â	Â	2005-9999	Â	-	0-0

CSC

CUSTOMER SYMPTOM CODE

Code	Description
QF	Steering/Constant pull to left
QG	Steering/Constant pull to right
8V	Tires/Pulls/drifts

DTC

TEXT

CSC = Customer Symptom Code

DTC = Diagnostic Trouble Code

NOTE: **If using a printed copy of this Retailer Technical Journal, first check for the latest online version.**

NOTE: **THIS DOCUMENT SUPERSEDES THE PREVIOUS RETAILER TECHNICAL JOURNAL 19674 DATED 02-09-2010. Wheel angle specifications for the 2011 S60 have been added. PLEASE UPDATE YOUR FILES.**

DESCRIPTION

Wheel angle specifications must be updated more often than the standard VIDA DVD update. Until

further notice, Volvo Cars of North America (VCNA) will use this Retailer Technical Journal (RTJ) to update and publish current wheel angles for Front Wheel Drive (FWD) and All Wheel Drive (AWD) models. This RTJ is updated when the designing department at Volvo Car Corporation (VCC) modifies a value for one or more wheel angles or when a new vehicle model is released.

SERVICE

For the current wheel alignment specifications, please refer to the attached tables. Be sure the alignment equipment at your facility is updated.

		Volvo Car Customer Service
		TJ Instruction
		No. 19674
		Date July -10 Issue 05
Title	Wheel angle specifications	

Issue	Date	Reason
05	July -10	Toe measurement across both wheels, front XC90 2009- Thrust angle S60 (11-)
04	July - 10	Wheel angle specifications for new model – S60
03	Febr -10	Variation and adjustment values are added to all previous control values. A number of specific values are updated.
02	April -09	Wheel angle specifications for new model - S80L

1.

Note! Some variation in the illustrations may occur, but the essential information is always correct.

2.

This instruction will be updated when the designing department at Volvo Car Corporation (VCC) decides to modify a value for one or more wheel angles or when a new vehicle model is released.

Note! New toe values. The check value is used when measuring wheel angles. When adjusting, use the adjustment value, however, if the value is within the check value, adjustment is not necessary.

VOLVO

Fig. 1: Wheel Alignment Specifications (TJ 19674) Instruction Attachment (1 Of 11)

Instruction T9232	Page 2 of 11

3.

Toe

Adjusting to positive values generates toe-in angle while adjusting to negative values generates toe-out angle.

Note! All published toe values are for total toe measurement (left and right wheels together).

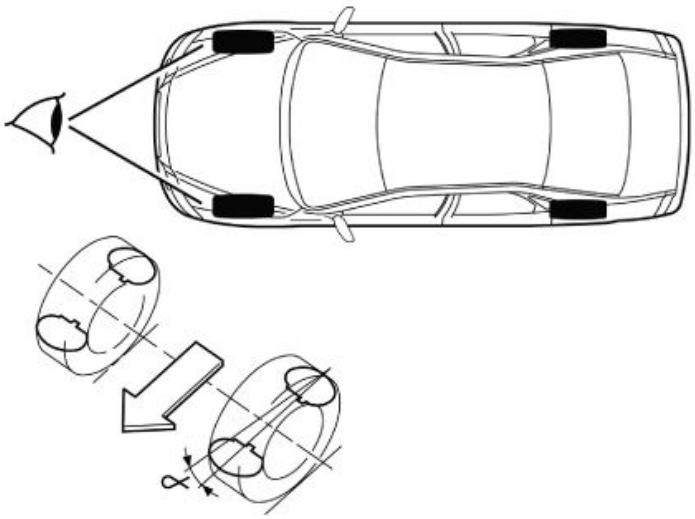

D6400515

Fig. 2: Wheel Alignment Specifications (TJ 19674) Instruction Attachment (2 Of 11)

VOLVO		TJ Instruction	T9232	Page 3 of 11

4.

Camber

The graphic shows a positive camber angle, and the dashed line equals the plumb line.

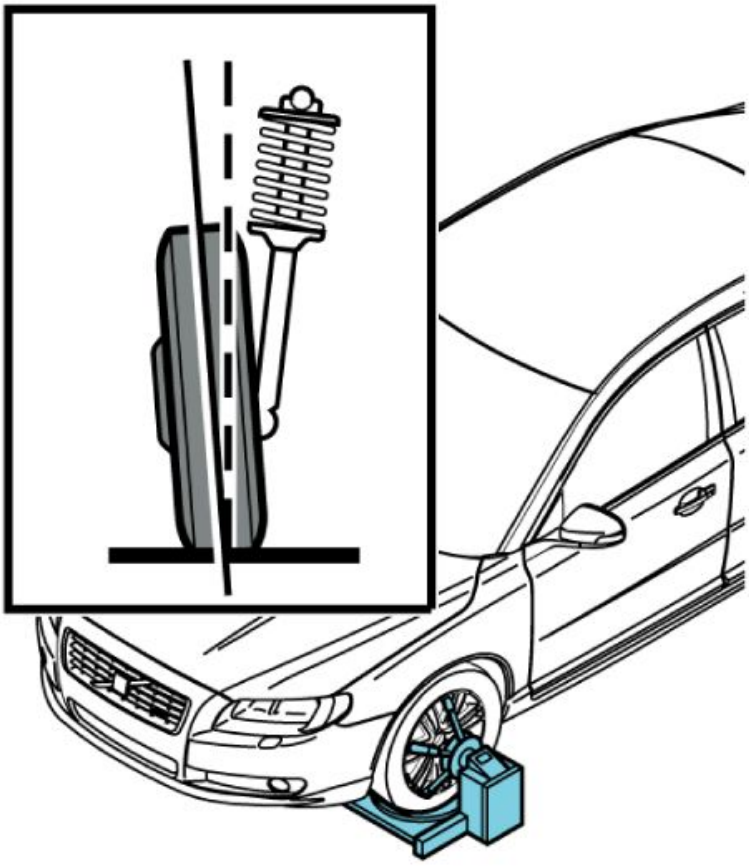

Fig. 3: Wheel Alignment Specifications (TJ 19674) Instruction Attachment (3 Of 11)

Instruction T9232	Page 4 of 11

5.

Caster

The graphic shows a positive caster angle.

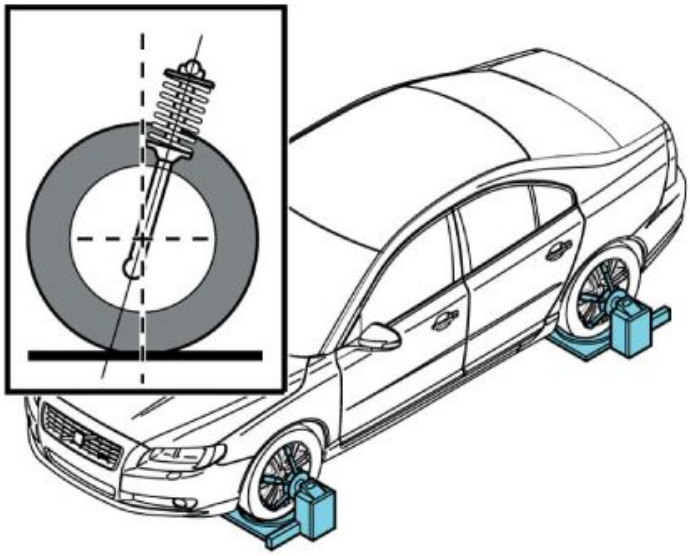

Fig. 4: Wheel Alignment Specifications (TJ 19674) Instruction Attachment (4 Of 11)

VOLVO		TJ Instruction	T9232	Page 5 of 11

6.

Thrust angle

A -center line

B -thrust angle

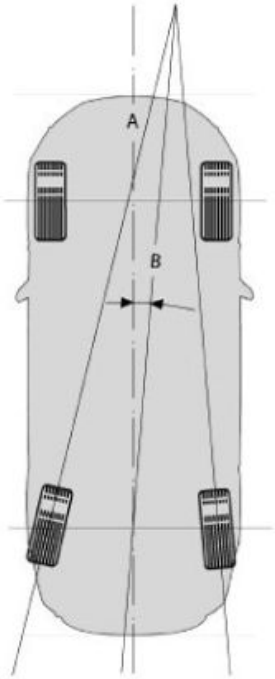

7.

Thrust angle (B)

Model	Control value		Adjust value	
	Degrees	Degree minutes	Degrees	Degree minutes
XC90	0° ± 0.25°	0' ± 15'	0° ± 0.10°	0' ± 6'
S60(11-)	0° ± 0.20°	0' ± 12'	0° ± 0.10°	0' ± 6'
Other models	0° ± 0.25°	0' ± 15'	0° ± 0.25°	0' ± 15'

Fig. 5: Wheel Alignment Specifications (TJ 19674) Instruction Attachment (5 Of 11)

Instruction T9232	Page 6 of 11

C30/ S40 (04-)/ V50/ C70 (06-)

Camber measurement per side, front

Model	Front		Variation left/right	
	Degrees	Degree minutes	Degrees	Degree minutes
S40/V50/C30 std and dynamic	-0.6° ± 0.7°	-36' ± 42'	0° ± 1°	0' ± 60'
S40/V50 AWD	-0.68° ± 0.7°	-40' 48" ± 42'	0° ± 1°	0' ± 60'
S40/V50/C30 Sport chassis	-0.9° ± 0.7°	-54' ± 42'	0° ± 1°	0' ± 60'
S40/V50/C30 ECOCH	-0.75° ± 0.7°	-45' ± 42'	0° ± 1°	0' ± 60'
C70	-0.75° ± 0.7°	-45' ± 42'	0° ± 1°	0' ± 60'

Camber measurement per side, rear

Model	Rear		Variation left/right	
	Degrees	Degree minutes	Degrees	Degree minutes
S40/V50/C30 std and dynamic	-1.52° ± 1°	-91' 12" ± 60°	0° ± 1°	0' ± 60'
S40/V50 AWD	-1.52° ± 1°	-91' 12" ± 60°	0° ± 1°	0' ± 60'
C30 Sport chassis	-1.92° ± 1°	-115' 12" ± 60°	0° ± 1°	0' ± 60'
S40/V50/C30 ECOCH	-1.72° ± 1°	-103' 12" ± 60°	0° ± 1°	0' ± 60'
C70	-1.72° ± 1°	-103' 12" ± 60°	0° ± 1°	0' ± 60'

Fig. 6: Wheel Alignment Specifications (TJ 19674) Instruction Attachment (6 Of 11)

VOLVO		TJ Instruction	T9232	Page 7 of 11

Caster measurement per side, front

Model	Front		Variation left/right	
	Degrees	Degree minutes	Degrees	Degree minutes
S40/V50/C30 std and dynamic	3.6° ± 1.5°	216' ± 90'	0° ± 1°	0' ± 60'
S40/V50 AWD	3.7° ± 1.5°	222' ± 90'	0° ± 1°	0' ± 60'
C30 Sport chassis	4.0° ± 1.5°	240' ± 90'	0° ± 1°	0' ± 60'
S40/V50/C30 ECOCH	3.8° ± 1.5°	228' ± 90'	0° ± 1°	0' ± 60'
C70	3.8° ± 1.5°	228' ± 90'	0° ± 1°	0' ± 60'

Toe measurement across both wheels, front *

Model	Control value		Adjust value	
	Degrees	Degree minutes	Degrees	Degree minutes
S40/V50/C30 std and dynamic	0.2° ± 0.2°	12' ± 12'	0.2° ± 0.1°	12' ± 6'
S40/V50 AWD	0.2° ± 0.2°	12' ± 12'	0.2° ± 0.1°	12' ± 6'
C30 Sport chassis	0.2° ± 0.2°	12' ± 12'	0.2° ± 0.1°	12' ± 6'
S40/V50/C30 ECOCH	0.2° ± 0.2°	12' ± 12'	0.2° ± 0.1°	12' ± 6'
C70	0.2° ± 0.2°	12' ± 12'	0.2° ± 0.1°	12' ± 6'

* when measuring individual toe, the value should be half of the total toe value

Toe measurement across both wheels, rear *

Model	Control value		Adjust value	
	Degrees	Degree minutes	Degrees	Degree minutes
S40/V50/C30 std and dynamic	0.3° ± 0.2°	18' ± 12'	0.3° ± 0.1°	18' ± 6'
S40/V50 AWD	0.3° ± 0.2°	18' ± 12'	0.3° ± 0.1°	18' ± 6'
C30 Sport chassis	0.3° ± 0.2°	18' ± 12'	0.3° ± 0.1°	18' ± 6'
S40/V50/C30 ECOCH	0.3° ± 0.2°	18' ± 12'	0.3° ± 0.1°	18' ± 6'
C70	0.3° ± 0.2°	18' ± 12'	0.3° ± 0.1°	18' ± 6'

* when measuring individual toe, the value should be half of the total toe value

Fig. 7: Wheel Alignment Specifications (TJ 19674) Instruction Attachment (7 Of 11)

S80 (-06)/ V70 (00-08)/ V70XC (01-)/ XC70 (-07)/ S60 (-09)/ XC90

Camber measurement per side, front

Model	Front		Variation left/right	
	Degrees	Degree minutes	Degrees	Degree minutes
S80 (-06) / V70 (01-07)/ S60 FWD (-09)	-0.3° ± 0.9°	-18' ± 54'	0° ± 1°	0' ± 60'
S80 (-06) / V70 (01-07) / S60 AWD (-09)	-0.3° ± 0.9°	-18' ± 54'	0° ± 1°	0' ± 60'
R-line	-0.5° ± 0.9°	-30' ± 54'	0° ± 1°	0' ± 60'
V70XC (01-)/XC70 (-07)	-0.3° ± 0.9°	-18' ± 54'	0° ± 1°	0' ± 60'
S80 (-06) / V70 (01-07)/ S60 Bi-fuel (-09)	-0.3° ± 0.9°	-18' ± 54'	0° ± 1°	0' ± 60'
XC90	-0.25° ± 0.5°	-15' ± 30'	0° ± 0.5°	0' ± 30'

Camber measurement per side, rear

Model	Rear		Variation left/right	
	Degrees	Degree minutes		Degree minutes
S80 (-06) / V70 (01-07)/ S60 FWD Normal height chassis (-09)	0° ±1.0°	0' ± 60'	0° ± 1°	0' ± 60'
S80 (-06) / V70 (01-07)/ S60 FWD Lowered chassis (-09)	-0.6° ±1.0°	-36' ± 60'	0° ± 1°	0' ± 60'
V70 (01-07) AWD	-0.3° ±1.0°	18' ± 60'	0° ± 1°	0' ± 60'
R-line	0.13° ± 1.0°	7' 48" ± 60'	0° ± 1°	0' ± 60'
V70XC (01-)/XC70 (-07)	0.3° ± 1.0°	18' ± 60'	0° ± 1°	0' ± 60'
XC90	-0.5° ± 0.6°	-30' ± 36'	0° ± 0.6°	0' ± 36'

Caster measurement per side, front

Model	Front		Variation left/right	
	Degrees	Degree minutes	Degrees	Degree minutes
S80 (-06) / V70 (01-07)/ S60 (-09)/ R-line	4.0° ± 1 °	240' ± 60'	0° ±0.25°	0' ± 15'
V70XC (01-)/XC70 (-07)	5.0° ± 1.0°	300' ± 60'	0° ±0.25°	0' ± 15'
XC90	5.2° ± 0.5°	312' ± 30'	0° ± 0.50°	0' ± 30'

Fig. 8: Wheel Alignment Specifications (TJ 19674) Instruction Attachment (8 Of 11)

VOLVO		TJ Instruction	T9232	Page 9 of 11

Toe measurement across both wheels *

Model	Front		Rear	
	Degrees	Degree minutes	Degrees	Degree minutes
S80 (-06) / V70 (01-07)/ S60 (-09)	0.1° ± 0.1°	6' ± 6'	0.2° ±0.2°	12' ± 12'
R-line	0.1° ± 0.1°	6' ± 6'	0.16° ±0.2°	9' 36" ± 12'
V70XC (01-)/XC70 (-07)	0.2° ± 0.1°	12' ± 6'	0.2° ±0.2°	12' ± 12'

* when measuring individual toe, the value should be half of the total toe value

Toe measurement across both wheels, front *

Model	Control value		Adjust value	
	Degrees	Degree minutes	Degrees	Degree minutes
XC90 -2008	-0.16° ± 0.2°	-9' 36" ± 12'	-0.16° ± 0.1°	-9' 36" ± 6'
XC90 2009-	0.16° ± 0.2°	9' 36" ± 12'	0.16° ± 0.1°	9' 36" ± 6'

* when measuring individual toe, the value should be half of the total toe value

Toe measurement across both wheels, rear *

Model	Control value		Adjust value	
	Degrees	Degree minutes	Degrees	Degree minutes
XC90	0.3° ± 0.2°	18' ± 12'	0.3° ± 0.1°	18' ± 6'

* when measuring individual toe, the value should be half of the total toe value

Fig. 9: Wheel Alignment Specifications (TJ 19674) Instruction Attachment (9 Of 11)

S80 (07-)/ V70 (08-)/ XC70 (08-)/ XC60/ S60 (11-)

Camber measurement per side

Model	Front		Variation left/right	
	Degrees	Degree minutes	Degrees	Degree minutes
XC60	-0.65° ± 0.5°	-39' ± 30'	0.0° ± 0.5°	0' ± 30'
V70 (08-)	-0.65° ± 0.5°	-39' ± 30'	0.0° ± 0.5°	0' ± 30'
XC70 (08 -) Chno - 64921	0.0° ± 0.5°	0' ± 30'	0.0° ± 0.5°	0' ± 30'
XC70 (08-) Chno 64922 -	-0.6° ± 0.5°	-36' ± 30'	0.0° ± 0.5°	0' ± 30'
S80 (07-)	-0.6° ± 0.5°	-36' ± 30'	0.0° ± 0.5°	0' ± 30'
S60 (11-)	-0.75 ± 0.5º	-45' ± 30'	0° ± 0.5°	0' ± 30'

* Camber variation left to right has to be positive

Camber measurement per side

Model	Rear		Variation left/right	
	Degrees	Degree minutes	Degrees	Degree minutes
XC60	-0.69° ± 0.5°	-41' 24" ± 30'	0.0° ± 0.5°	0' ± 30'
V70 (08-)	-1.13° ± 0.5°	-67' 48" ± 30'	0.0° ± 0.5°	0' ± 30'
XC70 (08-)	-0.75° ± 0.5°	-45' ± 30'	0.0° ± 0.5°	0' ± 30'
S80 (07-)	-1.32° ± 0.5°	-79' 12" ± 30'	0.0° ± 0.5°	0' ± 30'
S60 (11-)	-1.25 ± 0.5º	-75' ± 30'	0° ± 0.5°	0' ± 30'

Caster measurement per side

Model	Front		Variation left/right	
	Degrees	Degree minutes	Degrees	Degree minutes
XC60	2.9° ± 0.5°	174' ± 30'	0.0° ± 0.7°	0' ± 42'
V70 (08-) /XC70 (08-)	3.1° ± 0.5°	186' ± 30'	0.0° ± 1.0°	0' ± 60'
S80 (07-)	3.1° ± 0.5°	186' ± 30'	0.0° ± 1.0°	0' ± 60'
S60 (11-)	3.2° ± 0.5°	192' ± 60'	0° ± 0.7°	0' ± 42'

Fig. 10: Wheel Alignment Specifications (TJ 19674) Instruction Attachment (10 Of 11)

VOLVO		TJ Instruction	T9232	Page 11 of 11

Toe measurement across both wheels, front *

Model	Control value		Adjust value	
	Degrees	Degree minutes	Degrees	Degree minutes
XC60/ V70 (08-) /XC70 (08-) / S80 (07-)	0.2° ± 0.2°	12' ± 12'	0.2° ± 0.1°	12' ± 6'
S60 (11-)	0.24° ± 0.15°	14.4' ± 9'	0.24° ± 0.1°	14.4' ± 6'

* when measuring individual toe, the value should be half of the total toe value

Toe measurement across both wheels, rear *

Model	Control value		Adjust value	
	Degrees	Degree minutes	Degrees	Degree minutes
XC60/ V70 (08-) /XC70 (08-)	0.2° ± 0.2°	12' ± 12'	0.2° ± 0.1°	12' ± 6'
S80 (07-)	0.16° ± 0.2°	9.6' ± 12'	0.16° ± 0.1°	9.6' ± 6'
S60 (11-)	0.30° ± 0.2°	18' ± 12'	0.3° ± 0.1°	18' ± 6'

* when measuring individual toe, the value should be half of the total toe value

Fig. 11: Wheel Alignment Specifications (TJ 19674) Instruction Attachment (11 Of 11)

Copyright 2013 Mitchell Repair Information Company, LLC. All Rights Reserved.

Article GUID: B00386838