Volvo 240 Headlamp Step Relay, PN 1307991

How to substitute available relays for the Volvo step relay. By Dave Barton

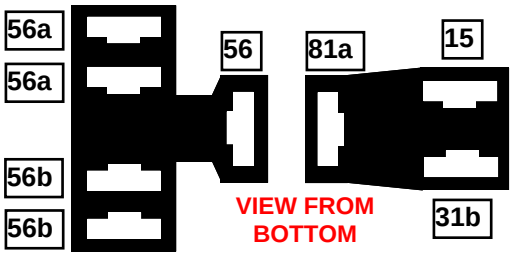

Original Volvo step relay circuits. Wire colors may vary slightly depending on year.

15:	Blue	12V Battery (common with 81a)
81a:	Blue	12V Battery (common with 15)
31b:	Brown	High Beam Stalk (negative ground switched)
56:	Yellow	12V from Lamp Switch or Headlamp Relay for 1986+
56a:	Red/White, Red	Dash Indicator Light (Red/White), High Beam Headlamp (Red)
56a:	Red	High Beam Headlamp
56b:	Blue/White	To Bulb Failure Sensor, then Low Beam Headlamps

Headlight Hi-Lo Latching Relay available for VW, motorcycles, etc.

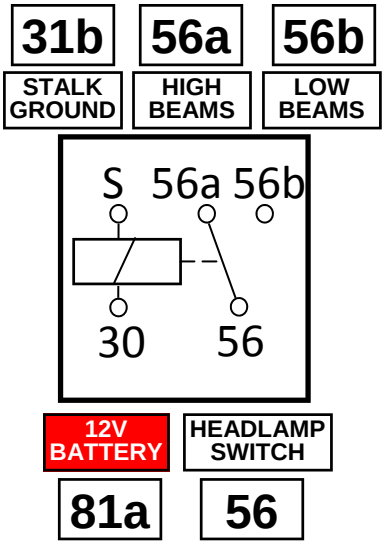

Standard ISO Mini Relay, 40A, SPST.

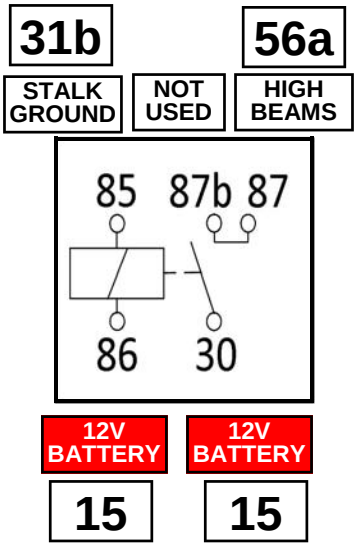

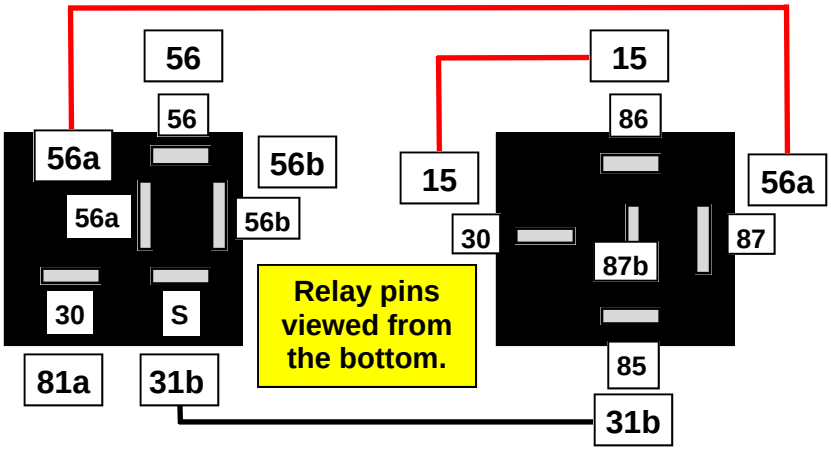

As the original Volvo 240 headlight step relays become more expensive and less common, here is a viable alternative that I have designed that you can create yourself if it becomes necessary. You will need to locate this relay shown. Search for **"VW latching headlight relay."**

This is basically a copy of an old VW headlamp dip relay. Cost will be about $20. This is a special mechanical latching relay that does the latching part of what the Volvo relay does.

The latching outputs are poles 56a and 56b and they will alternate with each tug of the stalk. The second relay is a common 4 or 5 pole relay (40 amp recommended).

Remove all of the harness terminals from the old plastic relay connectors and wire the new relays to those circuits as shown here. The three circuits you see here that are connected or "bridged" will need to be connected as shown.

This setup accurately mimics what the original Volvo step relay does. It does not eliminate the recommendation or need for additional headlight relays to feed high current headlights if you have them. It simply copies the Volvo relay.

Your feedback is welcome. If you build one of these for your car, I would like to hear from you.

Thank you, Dave Barton

SIMPLIFIED DIAGRAM

Latching relay controls switching from low to high beams when headlight switch is ON.
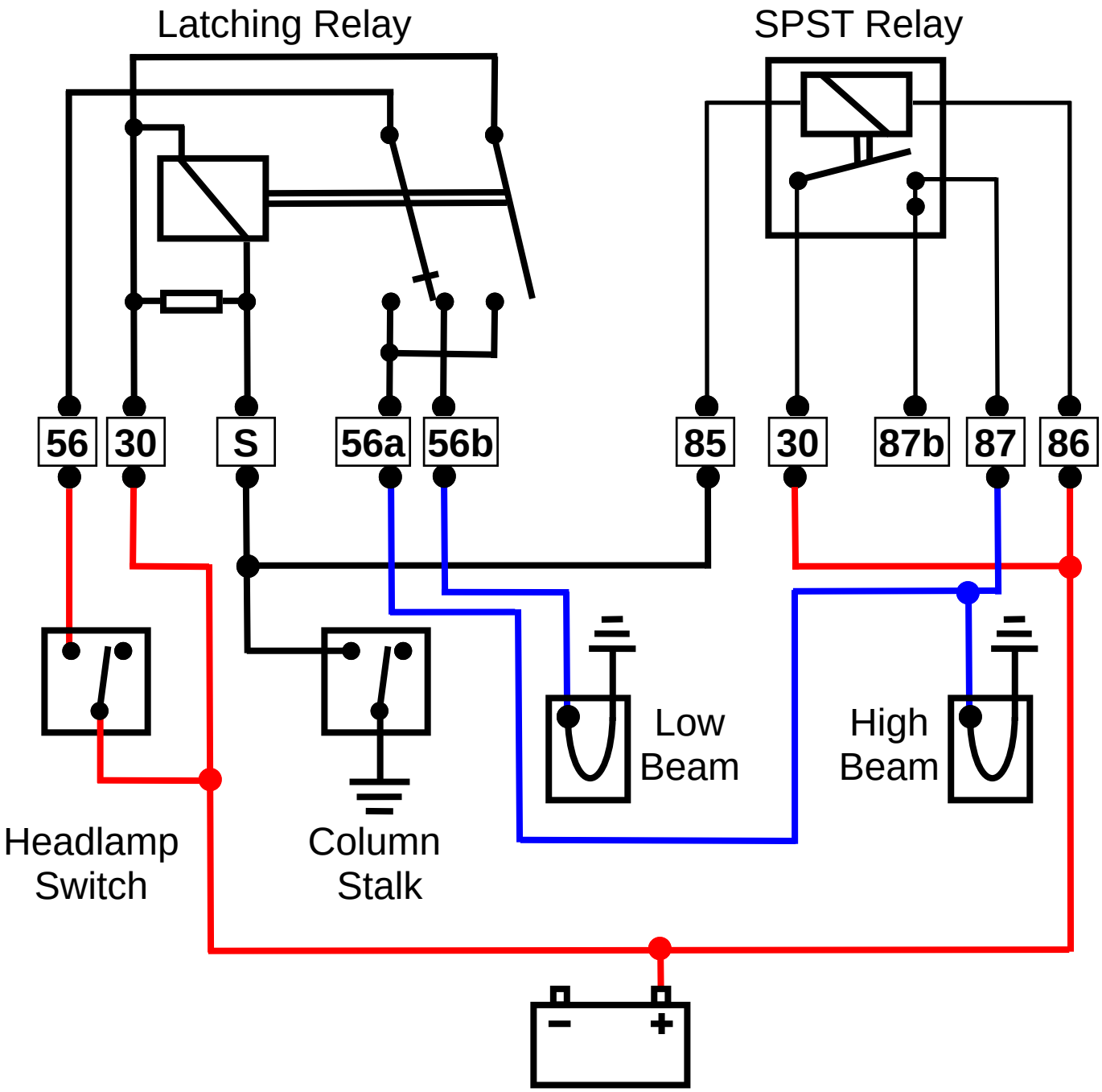
Standard mini relay controls momentary high beam flash when headlight switch is OFF.