Air-conditioning system. System overview and working principles

The illustration below shows the system in 1991-1993 models

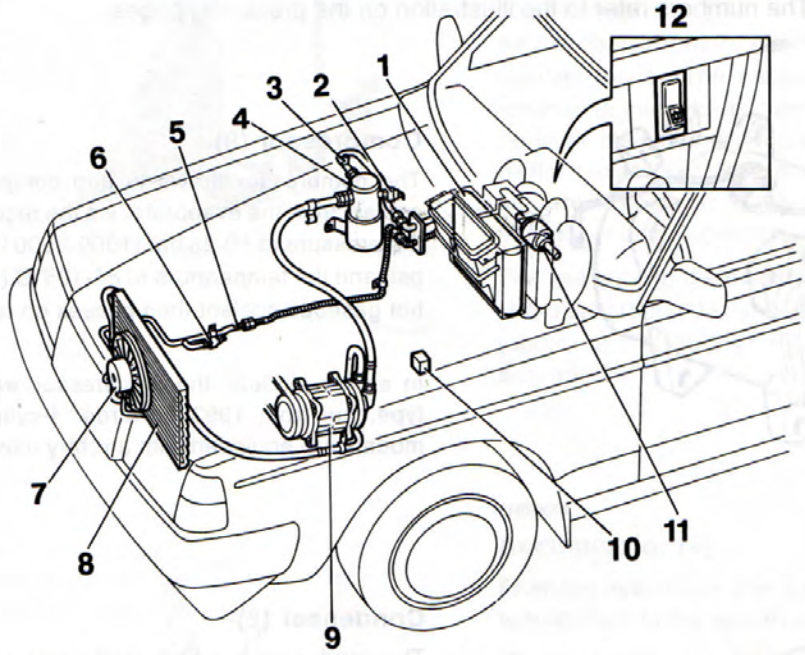

S150532

1. Evaporator	5. Orifice	9. Compressor
2. Low-pressure pressostat	6. Pressure sensor, electric coolant fan (FC)	10. Relay, electric coolant fan (FC)
3. Service valve	7. Electric coolant fan (FC)	11. Fan motor
4. Accumulator	8. Condenser	12. AC switch

The purpose of an air-conditioning system in a car is to keep the temperature in the passenger compartment down when the temperature outside is high and to dehumidify the air when it is damp.

An air-conditioning system does not generate "cold", but removes heat from the passenger compartment.

To remove heat from the passenger compartment, it uses a medium whose temperature is lower than that of the air, as heat always flows from a hot body to a cold one.

The medium used is a fluid (R12 chlorofluorocarbon in earlier models, R134a with fluorine only from 1993 models onwards).

The fluid boils and evaporates at low temperature (-30°C (-22°F) at normal air pressure).

The coolant pressure and temperature vary with one another, so that if the pressure changes, for instance, the temperature changes also. This assumes that the volume is constant.

The air-conditioning system exploits this relationship.

By allowing coolant to circulate in a closed system and changing its pressure and volume, it can be made to change temperature and boil (evaporate). At the pressure prevailing in the system (approx. 1.7-3.2 bar (170-320 kPa, 24.7-46.6 psi)), the coolant boils at around 0° to + 4°C (32-39.2°F). There must be a supply of heat for the coolant to boil. This heat is taken from the air around the evaporator in which the coolant boils. As the coolant absorbs heat, it cools the surrounding air. And it is this cool air which the climate control system fan blows into the passenger compartment. The heat which the coolant absorbs in the evaporator is carried to the engine compartment where it is passed to the air by the condenser which is cooled by the incoming air and/or electric coolant fan.

The air-conditioning system is of the compressor type, which means that a compressor forces coolant through the various components.

More details of some of the main components of the air-conditioning system will be found on the next three pages.

The main components of the air-conditioning system and how they work

The numbers refer to the illustration on the preceding pages.

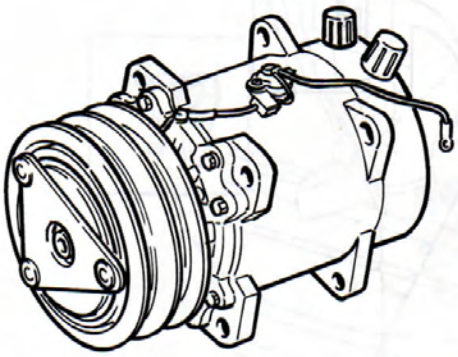

8700761S

Compressor (9)

The compressor draws in and compresses gaseous coolant from the evaporator via the receiver. This raises the pressure to 10-25 bar (1000-3500 kPa, 145.0-362.6 psi) and the temperature to 65-105°C (149-221°F). The hot gaseous coolant then passes on to the condenser.

In earlier models, the compressor was of the piston type, but from 1993 onwards, 4-cylinder and diesel models are equipped with a rotary vane type

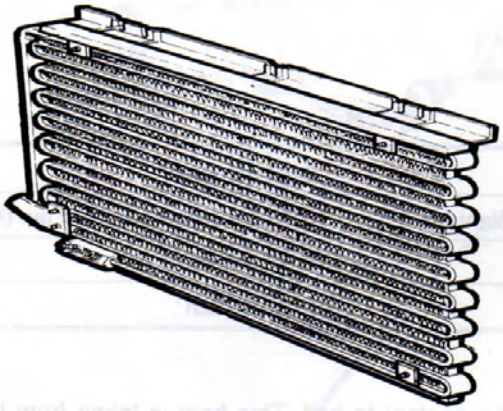

8700763S

Condenser (8)

The condensor is a heat exchanger with a tubular coil and cooling fins. It cools the coolant from the compressor by using the incoming air and the engine coolant fan. During the process, the gaseous coolant turns to a liquid (condenses).
The fluid is then passed at high pressure and temperature to an orifice.

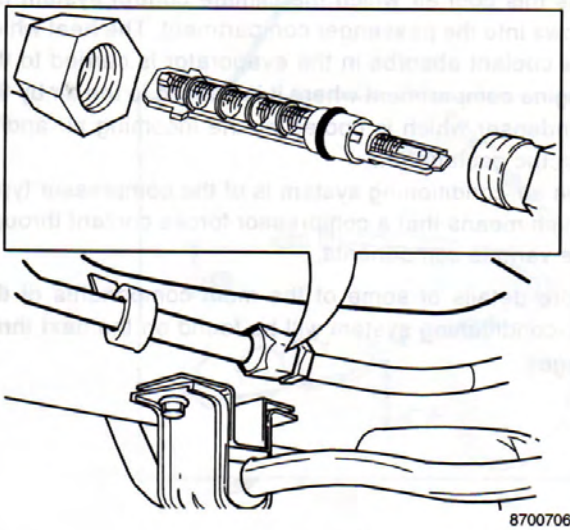

8700706A

Orifice (expansion tube) (5)

The orifice was added to the 240 in 1991. Earlier models were equipped with an expansion valve. The design acts as a throttling device, lowering the pressure of the coolant so it will evaporate at room temperature. On leaving the orifice, the coolant is partially liquefied and at low temperature (approx. 3-6° C (37.4-42.8°F)).
From the orifice, the coolant passes to the evaporator.

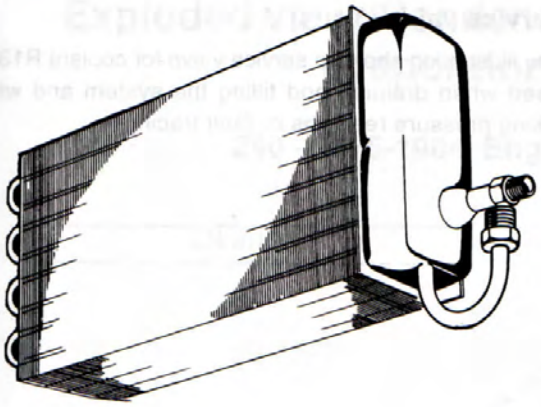

8701453S

Evaporator (1)

The evaporator is a heat exchanger mounted in the climate control system unit in the passenger compartment.
As the coolant enters the evaporator, it expands and gasifies (boils). The pressure in the evaporator and receiver is much lower than in the rest of the system, because the compressor creates a partial vacuum.
As the coolant boils, it absorbs heat from the surrounding air, which cools as a result. It is this air which the passenger compartment fan blows into the car.

The gas leaving the evaporator is now at low pressure (1.5-3 bar (150-300 kPa, 21.8-43.5 psi)) and temperature (approx. 2-5°C (35.6-41°F)). The gas now passes to the accumulator.

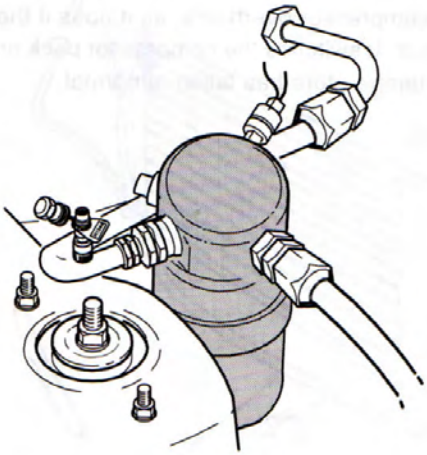

8701736A

Accumulator (4)

From the evaporator, the gas flows at low pressure and temperature to the accumulator.

The accumulator has a number of functions:

- e.g., it stores any coolant currently not required by the system
- it removes any moisture present in the coolant by means of a drying agent. A special new drying agent has been introduced in 1993 models onwards which use R134a coolant
- it provides a reserve of coolant under differing operating conditions. Partly to compensate for losses through hose walls, O-rings and the compressor shaft seal (diffusion).

(It returns oil to the gas flowing through the compressor.)

The accumulator is designed to prevent any coolant leaving it in liquid form (which could damage the compressor). This is done by positioning the accumulator outlet higher up where only gas is present.

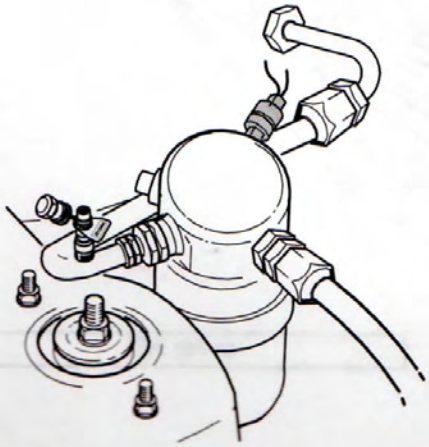

8701737A

Low-pressure switch (pressostat) (2)

The illustration shows a pressostate for coolant R12.
The low-pressure switch senses the pressure of the coolant leaving the evaporator, i.e. on the low-pressure side of the system. The AC compressor cuts out if the pressure is too low (less than approx. 1.6 bar (160 kPa, 23.2 psi)) and switches on again once the pressure rises (over 3.1 bar (310 kPa, 44.9 psi)).
If it did not shut off, the evaporator would get so cold that water condensing on the evaporator would freeze.